SunWize® Power & Battery

Solar Modules

SunWize Age of Power Autonomy
www.sunwizepower.com

Solar Modules (80W - 110W / 12V)

High quality solar module modules for industrial applications. Top-quality performance for all solar electric power applications such as monitoring and control, security, instrumentation, communications, and general battery charging. Two (2) bypass diodes protect against hot-spot damage during partial shading. Junction box has (4)-1/2" conduit knockouts and (2) pre-installed cord grips.

SWPB Part #	017115	017102
Rated Power (Watts)	80W	110W
Voc Open Circuit Voltage (Volts)	22.6	22.7
Isc Short Circuit Current (Amps)	4.7	6.3
Vmp Rated Voltage (Volts)	18.7	18.4
Imp Rated Current (Amps)	4.3	6.0
Max System Voltage (VDC)	1000V	1000V
Series Fuse Rating (Amps)	10	15
Dimensions and Weights		
Module Size (l x w) inches	35.3 x 26.4	43.1 x 26.2
Module Size (l x w) mm	870 x 670	1096 x 666
Weight (lb / kg)	15.4 / 7.0	17.6 / 8.0
Electrical / Thermal Parameters		
Voltage Temperature coefficient (Voc)	-0.35%/°C	
Current Temperature coefficient (Isc)	0.05%/°C	
Power Temperature coefficient (Pmax)	-0.40%/°C	
Peak Power Tolerance	+/-3%	
Warranty		
Limited Workmanship Warranty	2 years	
Limited Performance Warranty	15 years	

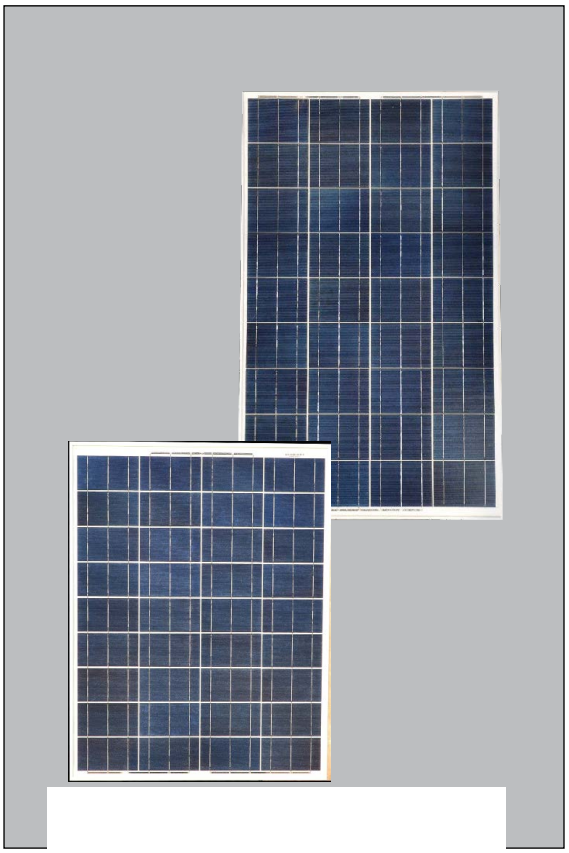

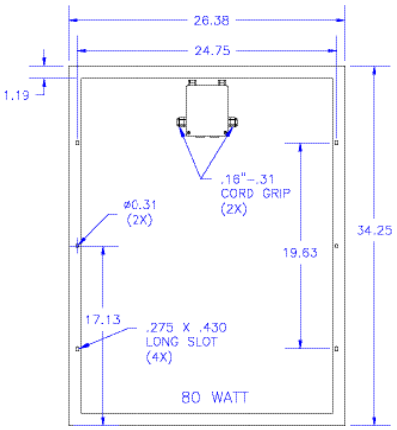

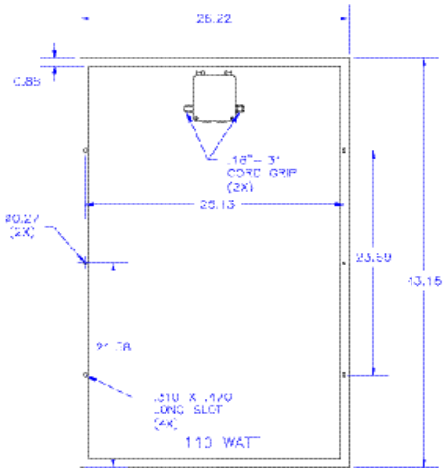

SHOP NOW

Headquarters
30893 Ehlen Dr Sw
Albany, OR 97321
(866) 827-6527