SunWize® Power & Battery
Solar Modules

SunWize Age of Power Autonomy
www.sunwizepower.com

Solar Modules (30W - 60W / 12V)

High quality solar module modules for industrial applications. Top-quality performance for all solar electric power applications such as monitoring and control, security, instrumentation, communications, and general battery charging. Two (2) bypass diodes protect against hot-spot damage during partial shading. Junction box has (4)-1/2" conduit knockouts and (2) pre-installed cord grips.

SWPB Part #	019385	017098	017114
Rated Power (Watts)	30W	40W	60W
Voc Open Circuit Voltage (Volts)	22.6	22.2	22.5
Isc Short Circuit Current (Amps)	1.7	2.6	3.6
Vmp Rated Voltage (Volts)	19.0	18.3	18.3
Imp Rated Current (Amps)	1.6	2.2	3.3
Max System Voltage (VDC)	1000V	1000V	1000V
Series Fuse Rating (Amps)	10	10	10
Dimensions and Weights			
Module Size (l x w) inches	16.2 x 26.2	21.3 x 26.4	27.6 x 26.4
Module Size (l x w) mm	666 x 412	670 x 540	700 x 670
Weight (lb / kg)	10/4.5	9.9 / 4.5	12.1 / 5.5
Electrical / Thermal Parameters			
Voltage Temperature coefficient (Voc)	-0.35%/°C		
Current Temperature coefficient (Isc)	0.05%/°C		
Power Temperature coefficient (Pmax)	-0.40%/°C		
Peak Power Tolerance	+/-3%		
Warranty			
Limited Workmanship Warranty	2 years		
Limited Performance Warranty			

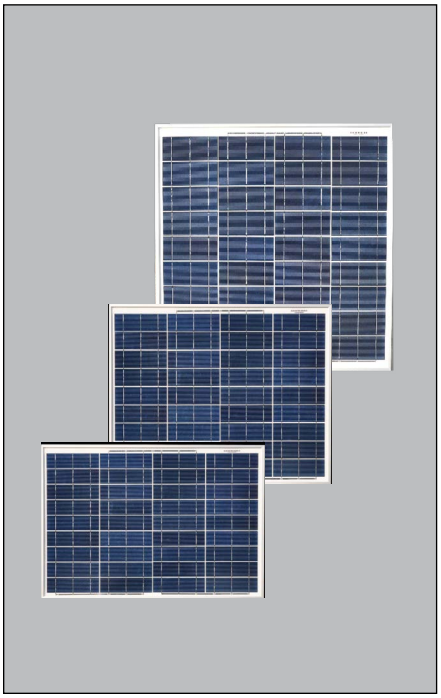

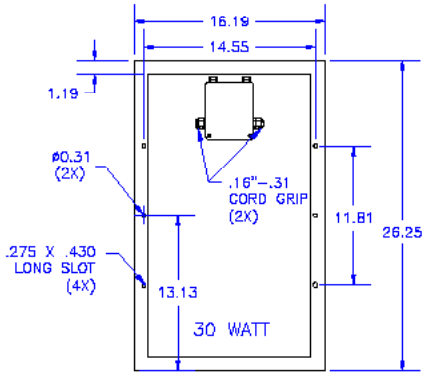

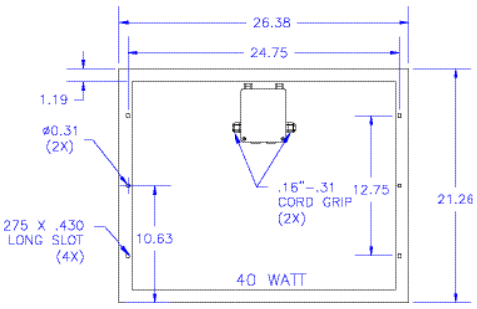

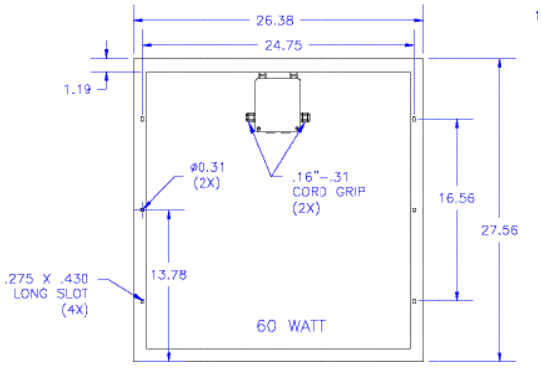

SHOP NOW

Headquarters
30893 Ehlen Dr Sw
Albany, OR 97321
(866) 827-6527