SunWize® Power & Battery

Self Standing Solar Structure

SunWize Age of Power Autonomy
www.sunwizepower.com

600W-750W Solar Skid Mount

240040

The Self Standing Solar Structure Skid Mount is a complete solution for mounting solar panels. It features a solid steel base with an enamel coating and adjustable aluminum mounting rails. The base has built-in lifting eyes for cranes and pockets for forklifts.

The structure can hold up to two typical 72-cell solar modules (300W - 375W) on the adjustable-tilt rails. Controls or battery enclosures can be mounted on the base to form a fully self-contained system.

Skid structures are ideal for projects where the power system needs to be frequently moved from one site location to the next.

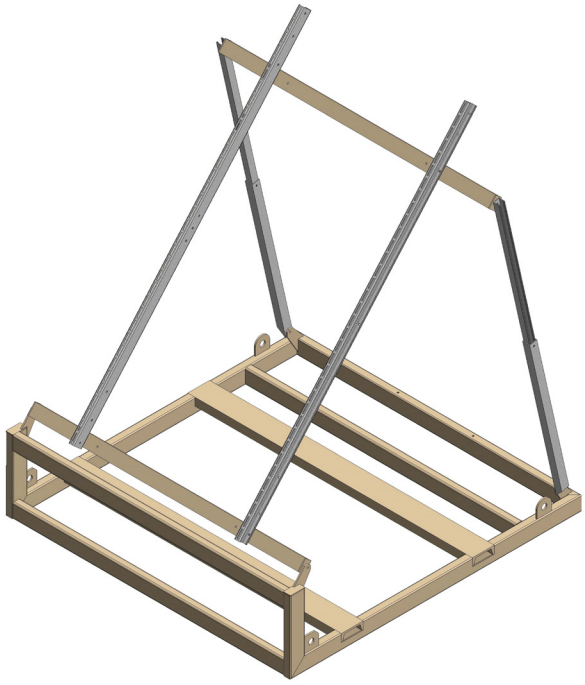

KEY FEATURES:

- Durable design
- Lifting eyes and fork pockets for easy moving
- Mounting holes for enclosures
- Supports up to (2) Modules for 750W
- Tilt Range 20°-45°
- Footprint 80" x 78-1/4"

Physical Specifications

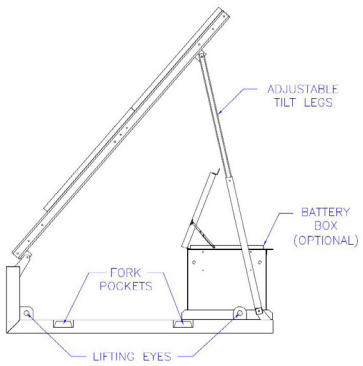

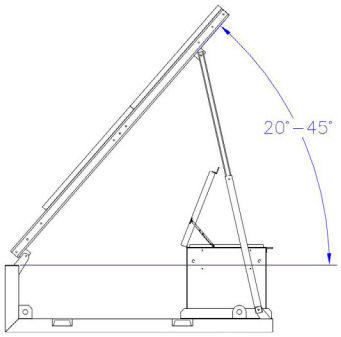

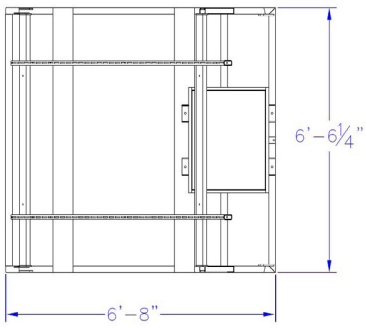

SunWize connect
www.dealer.sunwize.com

Headquarters
1337 Main Street
Philomath, OR 97370
(866) 827-6527
info@sunwizepower.com